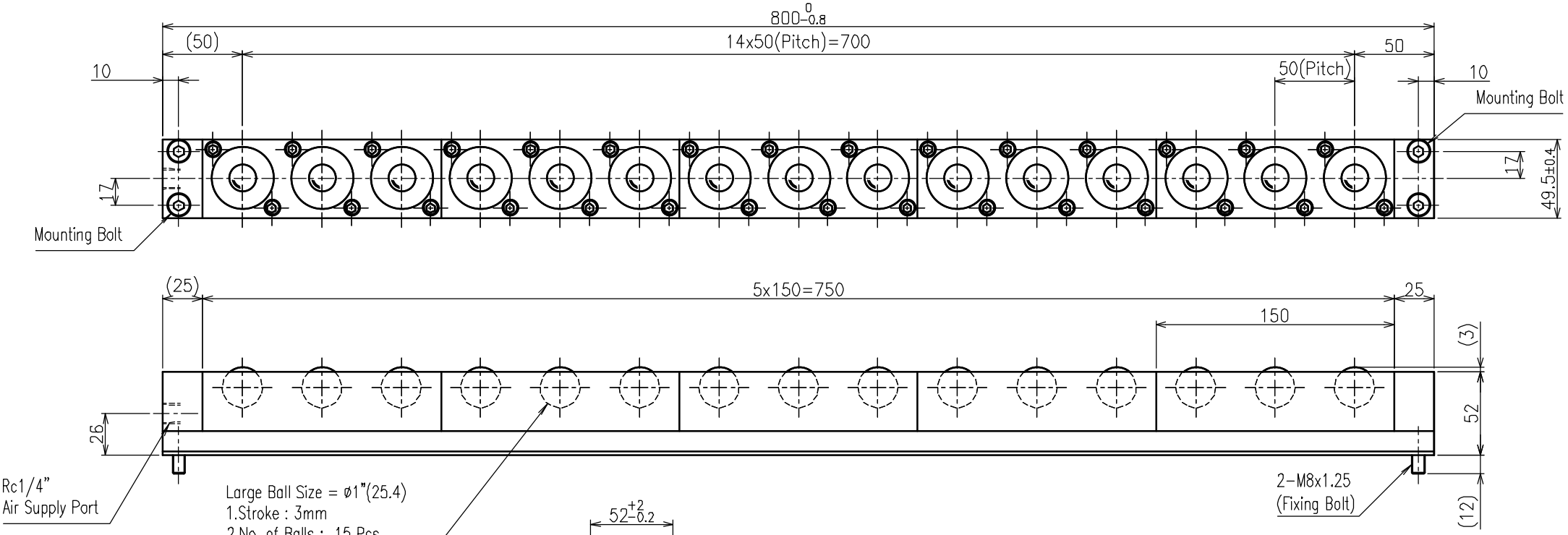

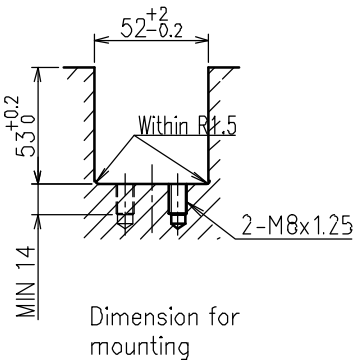

>Description
ISR50S Type Air Ball Lifter
ISR50S-800-A Type
Unit = mm