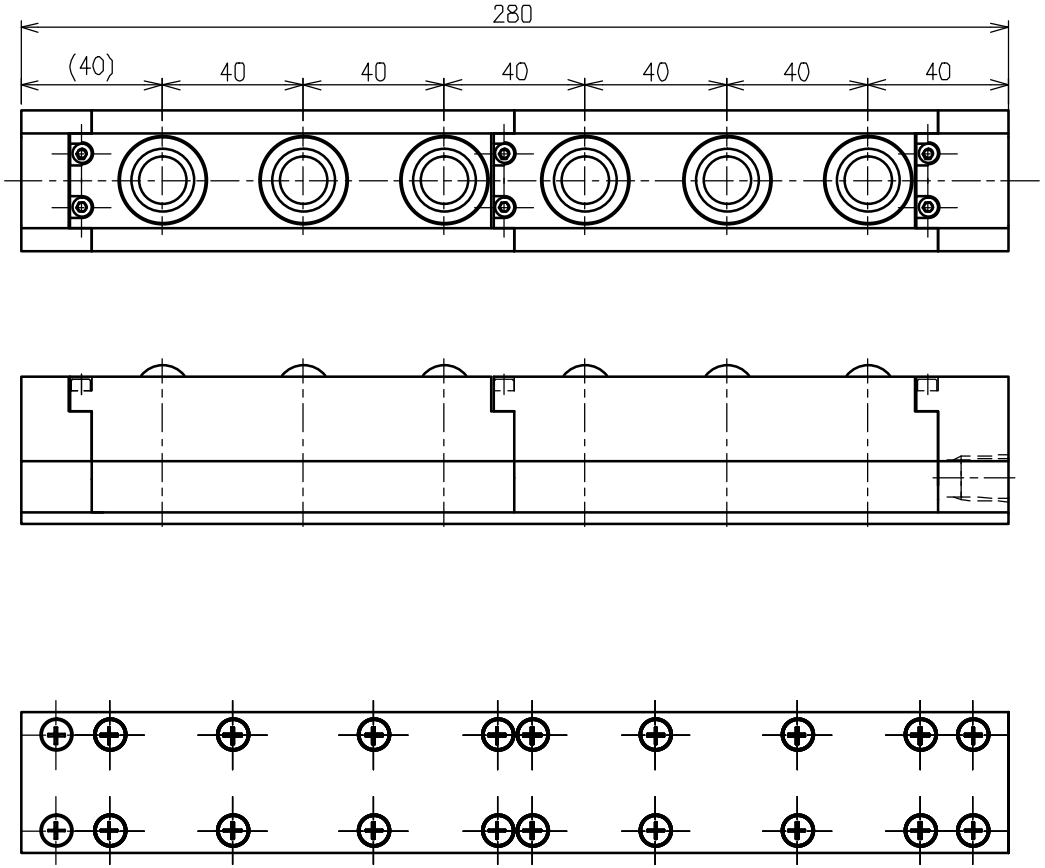

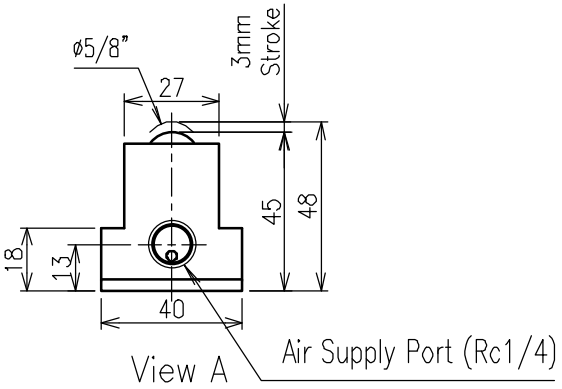

>Description
ISR−T Type Air Ball Lifter
ISR−28T−280 Type
Unit = mm

>Specification
Large Ball Size =ø5/8"(15.88mm)
Product Weight = 1.4kg

Ball = SUJ2
Cover = SUM
Body = A6063
Plug = A6063